Industrial Electric Fan Heater
9kW 400V 16A

Product Manual
Models Covered: IFH9/FF12

WARNINGS

These instructions should be read by:

The specifying engineer.
The installation engineer.
The user.
The service engineer.

- **Failure to follow these instructions may result in risk of personal injury or damage to the equipment.**
- **Damage due to a failure to follow these instructions will invalidate the warranty.**
- **The appliance must be commissioned & serviced by qualified engineers in compliance with local regulations.**
- **The appliance must be switched off and disconnected from the power supply before any work is carried out.**
- **There are no user controls inside the appliance casing.**
- **Do not cover the appliance.**
- **Do not use in the vacinity of a pool, bath or shower.**
- **An air gap of at least 300mm should be allowed at the rear of the unit to ensure a clear airflow. Do not site the unit close to soft fabrics or combustible materials. Do not obstruct the outlet grill.**
- **Allow the unit to cool by running fan only for a minimum of 5 minutes before switching off.**
- **Do not disconnect the appliance from the supply under load.**
- **For internal use only. Do not use out of doors.**
- **Extension cables should be correctly rated for the load,fully unwound and never run through water or over sharp edges.**
- This appliance should not be operated by children or those who have not read and understood the instructions.
- **The machine is not phase rotationally sensitive.**
- **This is a class 1 product and requires an Earth connection.**
- **Warning! Fan liable to start without warning.**
- **This appliance is not intended for use by persons (including children) with reduced physical, sensory or mental capabilities, or lack of experience and knowledge, unless they have been given supervision or instruction concerning use of the appliance by a person responsible for their safety.**

TECHNICAL SPECIFICATIONS.	
Heating capacity.	9 kW
Power supply.	400v. 3P+N+E. 16A. 50Hz.
Maximum running current @ 400v.	13A
Airflow.	1198 m^3/h
Weight.	9.6 kg
Noise level at 3M.	55 dB(A)
IP Rating.	IP24
Maximum operating temperature.	40 ºC +/- 3ºC
Power settings.	3. Fan only, 4.5kW, 9kW.
Temperature rise at 15 ºC ambient. (Nominal)	56 ºC

Standards applied:

BS EN 60335-2-30:2009+A12
BS EN 60335-1:2012+A15

BS EN IEC 55014-1:2021
BS EN IEC 55014-1:2021
BS EN 61000-3-3:2013+A1+A2
BS EN IEC 61000-3-2:2019+A1

MACHINE AND INSTRUCTION ICONS	
	Important information
	Warning. In order to avoid overheating, do not cover the heater.
	Safety limit thermostat reset.
	Fan only.
	Fan/ 4.5kW. Heat setting 1.
	Fan/ 9kW. Heat setting 2.
°C	Thermostat.

Specifications:

The IFH9/FF12 is an 9kw 3 phase industrial electric fan heater.

The machine is classified as a stationary appliance and should not be moved whilst connected to the power supply.

The appliance is connected to a 400v 16Amp 3P+N+E 50Hz power supply and comes fitted with the appropriate 1.6M cable with 5 pin industrial plug This appliance requires an Earth connection.

The machine may be fitted with an appropriately rated 5 pin extension lead, if the machine is situated a long way from the supply.

The machine is not phase rotationally sensitive !

The IFH9/FF12 heater is fitted with a high quality axial fan and an onboard thermostat as standard.

Extension lead specification:

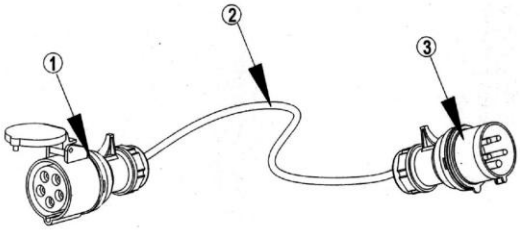

1: Trailing socket. 400v. 16A 5 pin. BS EN 60309.
2: Cable. 2.5mm CSA. H07RN-F (Recommended).
3: Plug. 400v. 16A. 5 Pin. BS EN 60309.

On cables longer than 2m always check the voltage drop and increase the cable size where appropriate.

Setup and operation:

To start:

- Please note ! the control panel is at the front of the appliance. (See P6)
- Site the appliance on a firm level surface.
- Connect the machine to the appropriate power supply.
- Switch the power rotary switch to the desired power level. I- Fan only, II- 4.5kW III- 9kW. (See P3).
- Turn the thermostat knob fully clockwise.
- When the desired room temperature has been achieved turn the thermostat knob anti-clockwise until an there is an audible click. The heating will now cycle on and off to maintain this temperature.

To stop:

- Switch the power rotary switche to I- Fan only and allow the fan to run for a minimum of five minutes to cool the machine. Failure to follow this procedure will damage sensitive components and invalidate the warranty.
- Switch the power rotary switch to 0 when the heat has dissipated.
- If the heat has not fully dissipated the fan may 'run on' automatically. (see P6)
- If the heater is not in regular daily use disconnect from the power supply.

Protective /safety devices:

- This appliance is fitted with a safety limit thermostat. This is a fail-safe device. Should the maximum design operating temperature be exceeded it will shut down the heater. This device requires a manual reset and should only operate in the event of a fault. Any activation of this safety device should be investigated by a competent engineer.
- The machine is fitted with an automatic fan run-on thermostat. If the machine is shut down without running on fan only for 5 minutes to cool down, this device will activate and allow the fan to keep running. This should not be used to routinely shut down the machine.

Front view. Control panel:

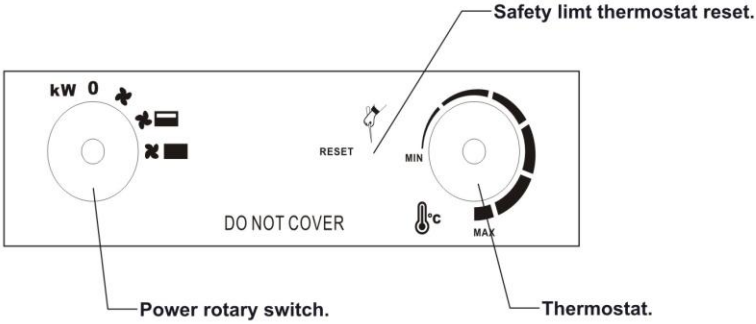

Checking and resetting the safety limit thermostat:

Should the safety limit thermostat activate the causes should be investigated.

Should the safety limt thermostat activate the fan and heating elements will not function. To reset the safety limit thermostat insert a small terminal screwdriver into the hole labelled 'Reset' and press the reset button within.

Exploded View

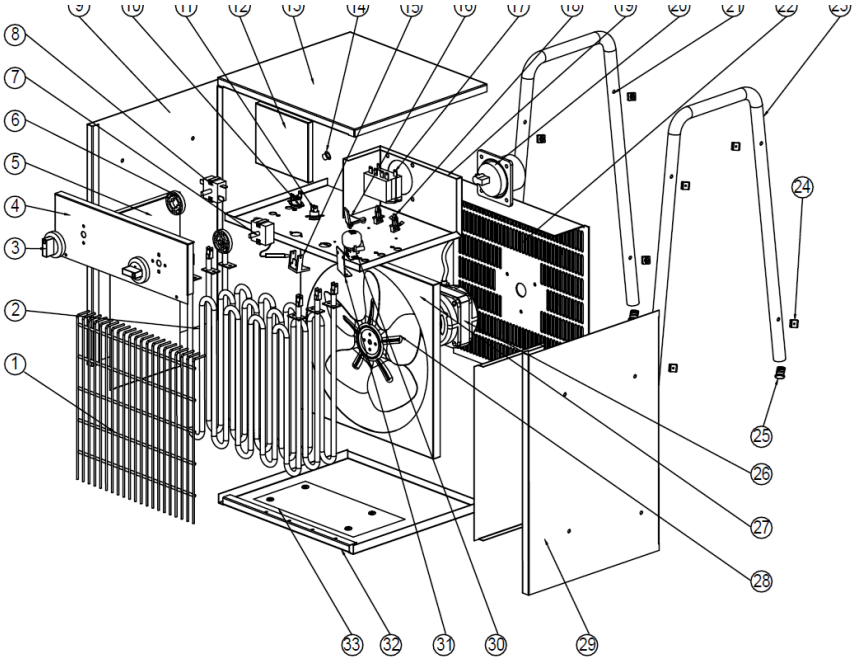

Parts List

33	bottom Thermal baffle	SECC	1
32	Lower plate	SPCC	1
31	Tip-over switch stents	SECC	1
30	Tip-over switch	250VAC 16A	1
29	Right panel	SPCC	1
28	Fan	ϕ200mm	1
27	Air passage	SECC	1
26	Motor	400V 50Hz 52W	1
25	Tube cap	PP	4
24	Plastic gasket	PA	8
23	Right handle	SPCC	1
22	Air inlet grill	SECC	1
21	Left handle	SPCC	1
20	Industrial plug	240/415V 16A	1
19	Middle panel	SECC	1
18	Sensor holder	PA	2
17	Relay	380-400V AC 25A	1
16	Manual reset thermostat bracket	PA	1
15	manual reset thermostat support	PA	1
14	Lock	PA6	1
13	Top cover	SPCC	1
12	Socket fixing plate	SECC	1
11	manual reset thermostat	KSD301-R/250V/16A	1
10	Time delay thermostat	250V/10A/K45	1
9	Left panel	SPCC	1
8	Rotary switch	250V15A	1
7	Thermostat with probe	400V/15A/40℃	1
6	Sealing ring	PA	2
5	Heat Insulation plate	SECC	2
4	Control panel	SPCC	1
3	Knob	PA	2
2	Tubular electric heating element	AC 220-240V 3000W	3
1	Front grill	SPCC	1
Key No.	Description	Material / Specifications	QTY

Wiring diagram:

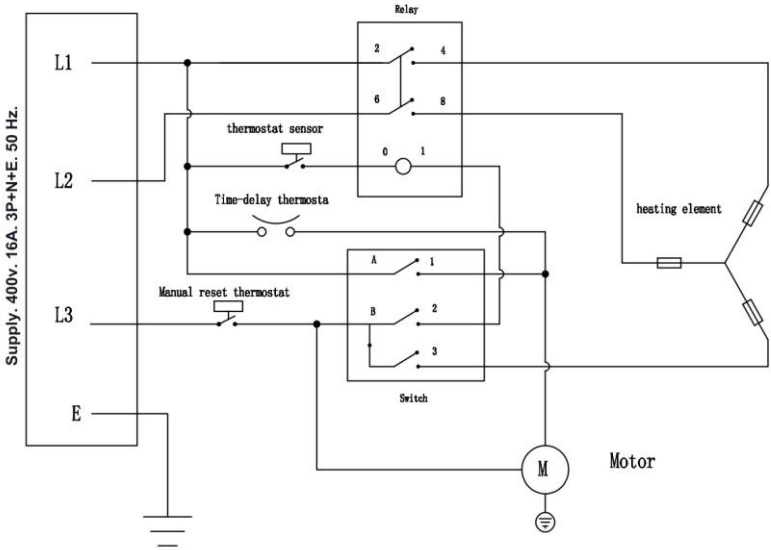

Maintenance:
Always isolate the machine from the power supply before Carrying out any maintenance.

Fan motors, elements and switch gear are not customer serviceable components. General maintenance should include regular inspection of:

1: Appliance inlet. Check for signs of heat damage to the pins. Replace if necessary.
2: Air intake & outlet grills: ensure grills are free from accumulated debris. blow out with compressed air if required.
3: Fixings: Check all fixings are present and secure.

Maintenance carried out by a competent person:

1: Internal cables should be inspected for signs of heat damage and replaced when necessary.

2: All cable connections should be regularly checked and tightened. Particular attention should be paid to the connections at the contactors.

3: Regularly check the relay for signs of heat. Replace if necessary.

FAULT	POSSIBLE CAUSE	SOLUTION
NO HEAT OUTPUT.	FANS AND OR HEATING NOT SWITCHED ON.	CHECK ALL SWITCHES ARE ON.
	THERMOSTAT INCORRECTLY SET.	TURN THERMOSTAT KNOB FULLY CLOCKWISE.
	POWER SUPPLY INTERRUPTED.	CHECK POWER SUPPLY.
	FAULTY ROTARY SWITCH.	CHECK SWITCHES AND REPLACE IF NECESSARY.
	FAULTY THERMOSTAT.	CHECK THERMOSTAT AND REPLACE IF NECESSARY.
	FAULTY RELAY.	CHECK CONTACTOR AND REPLACE IF NECESSARY.
	SAFETY LIMIT THERMOSTAT HAS ACTIVATED.	ALLOW THE MACHINE TO COOL. RESET THE SAFETY LIMIT THERMOSTAT. (SEE P6) INVESTIGATE THE CAUSE OF FAULT.
SAFETY LIMIT THERMOSTAT HAS ACTIVATED	AMBIENT ROOM TEMPERATURE TOO HIGH	DO NOT OPERATE IN AN AMBIENT TEMPERATURE ABOVE 40ºC.
	FAN MOTOR FAILURE	TEST FAN MOTOR AND REPLACE IF REQUIRED.
	CORRECT SHUTDOWN PROCEDURE NOT FOLLOWED	ALLOW THE MACHINE TO FULLY COOL AND FOLLOW CORRECT SHUTDOWN PROCEDURE. (SEE P4)
	FAILED SAFETY LIMIT THERMOSTAT	THE SAFETY LIMIT THERMOSTAT IS A FAIL-SAFE DEVICE. CHECK THE CAPILLARY TUBE AND BULB FOR SIGNS OF DAMAGE. REPLACE IF REQUIRED.
FAN MOTOR NOT RUNNING.	POWER SUPPLY INTERRUPTED.	CHECK POWER SUPPLY.
	FAN MOTOR OVER HEATED	THE FAN MOTOR HAS A HIGH TEMPERATURE PROTECTIVE DEVICE FITTED INTO THE WINDINGS. ALLOW THE MACHINE TO FULLY COOL AND ATTEMPT TO START.
	FAULTY ROCKER SWITCH	REPLACE ROCKER SWITCH
	SAFETY LIMIT THERMOSTAT HAS ACTIVATED	ALLOW THE MACHINE TO COOL. RESET THE SAFETY LIMIT THERMOSTAT. (SEE P6) INVESTIGATE THE CAUSE OF FAULT.

Item	Symbol	Value	Unit	Item	Unit
Heat output				Type of heat input, for electric storage local space heaters only (select one)	
Nominal heat output	Pnom	9	kW	Manual heat charge control with integrated thermostat	[no]
Minimum heat output (indicative)	Pmin	4.5	kW	Manual heat charge control with room and/or outdoor temperature feedback	[no]
Maximum continuous heat output	Pmax	9	kW	Electronic heat charge control with room and/or outdoor temperature feedback	[no]
Auxiliary electricity consumption				Fan assisted heat output	[no]
At nominal heat output	elmax	N/A	kW	Type of heat output/room temperature control (select one)	
At minimum heat output	elmin	N/A	kW	Single stage heat output and no room temperature control	[no]
In standby mode	elSB	N/A	W	Two or more manual stages, no room temperature control	[no]
				With mechanic thermostat room temperature control	[yes]
				With electronic room temperature control	[no]
				Electronic room temperature control plus day timer	[no]
				Electronic room temperature control plus week timer	[no]
				Other control options (multiple selections possible)	
				Room temperature control, with presence detection	[no]
				Room temperature control, with open window detection	[no]
				With distance control option	[no]
				With adaptive start control	[no]
				With working time limitation	[no]
				With black bulb sensor	[no]
Contact details:					
Remark: For electric local space heaters, the measured seasonal space heating energy efficiency ηs cannot be worse than the declared value at the nominal heat output of the unit.					

This product is only suitable for well insulated spaces or occasional use.